Chemical Containment Systems Inc.

www.ChemicalContainment.com
1-800-825-7872

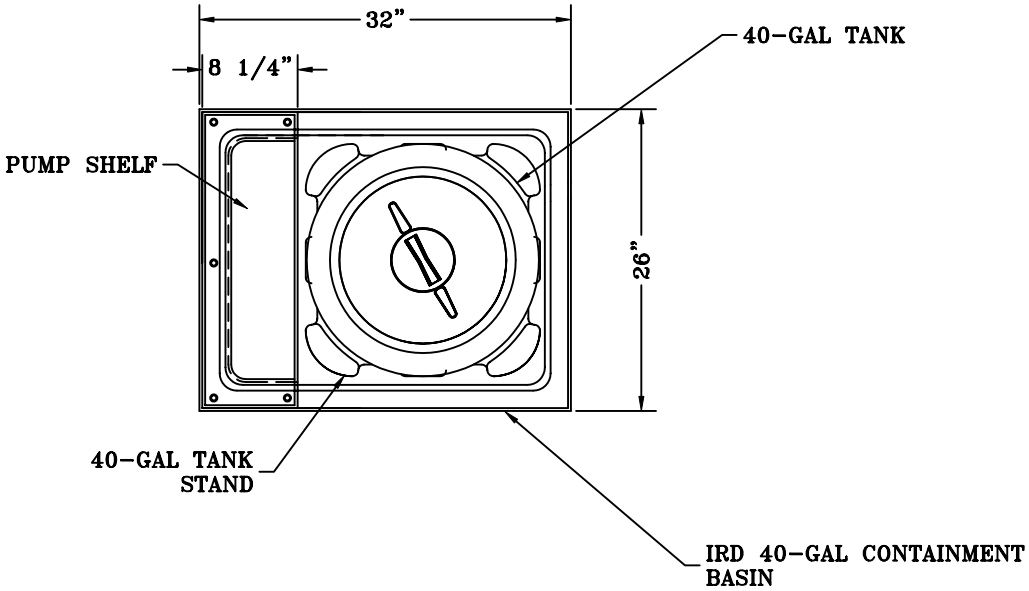

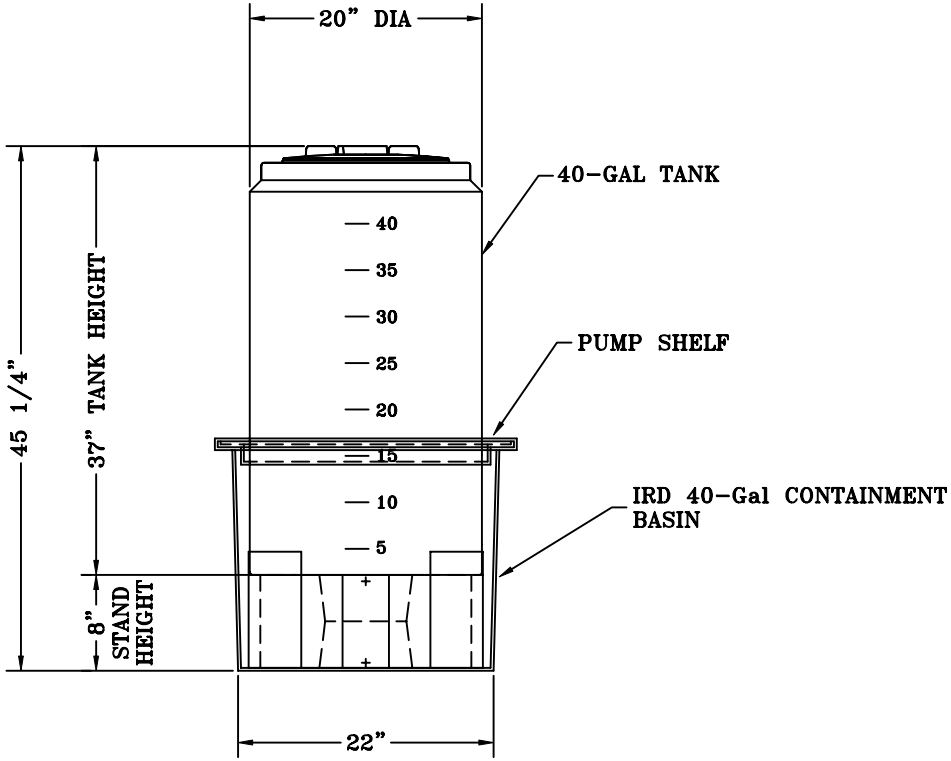

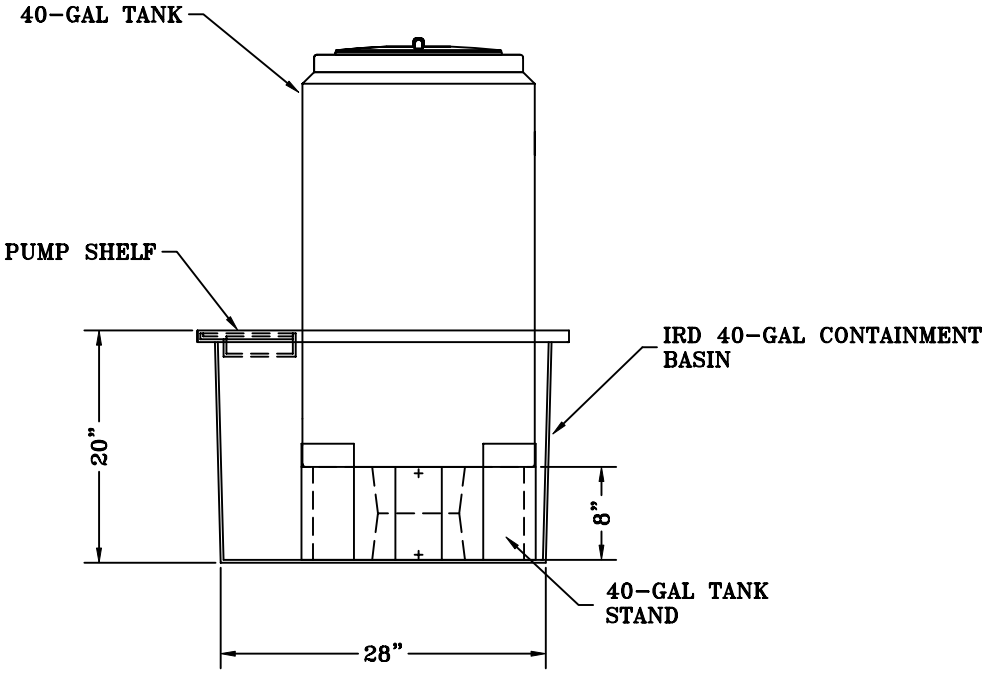

DWG TITLE: ASSMANN CORPORATION 40-GAL CHEMICAL FEED STATION		
SCALE NONE	Assmann CORPORATION OF AMERICA	DR S.Rowlison
DATE 4/20/00		CUSTOMER APPROVAL
		DWG NO ACFS 40 / REV